Dart Aerospace Ltd.

Date: Monday, 2/11/2008 11:36:53 AM
User: Eric Charbonneau

@ Metro

Process Sheet

Customer	: CU-DAR001 Dart Helicopters Services	**Drawing Name**	: BK117 SKIDTUBE ASSEMBLY
Job Number	: 32910 -1		
Estimate Number	: 12898		
P.O. Number	:	**Part Number**	: D117762041
This Issue	: 2/11/2008 **S.O. No.** :	**Drawing Number**	: D3582 REV ~~UR~~ A
Prsht Rev.	: NC	**Project Number**	: LG0005
First Issue	: 6/14/2007 **Type** : LANDING GEAR	**Drawing Revision**	: ~~UR~~ A 08.02.10
Previous Run	:	**Material**	:
Written By	:	**Due Date**	: 6/22/2007 **Qty:** ~~2~~ 1 **Um:** Each
Checked & Approved By	:		
Comment	: Est Rev:A 07.06.11 New Issue EC		

USED FOR D117-762-011 B33139

Additional Product

Job Number:

Seq. #:	Machine Or Operation:	Description :
1.0	DC	DOCUMENT CONTROL

Comment: DOCUMENT CONTROL
Photocopy bluefile & type labels per PPP D117-762-041 CHG001

2.0	D2962150P	3.540 Outer Tube, Extrut

Comment: Qty.: 1.0000 Each(s)/Unit Total : 2.0000 Each(s)
Pick:

Qty	Part Number	Description	Batch
1	D2962-150	Extrusion	B28672

08.02.01

3.0	LANDING GEAR 1	LANDING GEAR RESOURCE 1

Comment: LANDING GEAR RESOURCE 1

1-Determine square end of tube and deburr

2-Drill #30 pilot holes using DT8678. Do not open holes.

3- Deburr holes.

08.02.01

4.0	BENDING	BENDING MACHINE

Comment: BENDING MACHINE

Bend tube as per program D352 on CNC Bender and Dwg D3582. Use 5/16" locator pin on buggy "A".

08.02.01

Form: rprocess

Date: Monday, 2/11/2008 11:36:54 AM
User: Eric Charbonneau

Process Sheet

Customer: CU-DAR001 Dart Helicopters Services **Drawing Name:** BK117 SKIDTUBE ASSEMBLY

Job Number: 32910 **Part Number:** D117762041

Job Number:

Seq. #:	Machine Or Operation:	Description :
5.0	LANDING GEAR 1	LANDING GEAR RESOURCE 1

Comment: LANDING GEAR RESOURCE 1

1-Cut Fwd end of the tube using DT8185

2-Cut Aft end at VC using DT8185

3-Deburr ends

4-Drill Aft Cap holes using DT8678 ***DO NOT OPEN AFT CAP HOLE***

5-Locate DT & Drill Ground wire hole on top of Tube.

6-Install 3/16 cleco in Ground wire hole ,then drill all X-Bolt holes using 3/16" drill.

7-Drill pilot holes for wearplates using DT

8-Open wearplate holes and ground wire holes to Ø19/64" (0.297") as per Dwg D3582.

9-Open Aft Cap holes using .209" drill.

10-Deburr holes.

NP 08.02.04

6.0	D2964	Cap

Comment: Qty.: 1.0000 Each(s)/Unit Total : 2.0000 Each(s)
Cap
Batch: B14101

7.0	LANDING GEAR 1	LANDING GEAR RESOURCE 1

Comment: LANDING GEAR RESOURCE 1
1-Weld fwd cap D2964 per dwg D3582 and QSI 004
A/R AL ROD Batch: M104305/M102421/M104221 BE 08.02.04

2-Grind flush

Form: rprocess

Date: Monday, 2/11/2008 11:36:54 AM
User: Eric Charbonneau

Process Sheet

Customer: CU-DAR001 Dart Helicopters Services **Drawing Name:** BK117 SKIDTUBE ASSEMBLY

Job Number: 32910 **Part Number:** D117762041

Job Number:

Seq. #:	Machine Or Operation:	Description :
8.0	QC9	VISUAL WELDING INSPECTION
	Comment: VISUAL WELDING INSPECTION	08.02.05
9.0	QC5	INSPECT WORK TO CURRENT STEP
	Comment: INSPECT WORK TO CURRENT STEP	08.02.05
10.0	HAND FINISHING1	HAND FINISHING RESOURCE #1
	Comment: HAND FINISHING RESOURCE #1 Chemical Conversion Coat as per QSI 005 4.1	08.02.05
11.0	QC3	INSPECT POWDER COAT/CHEMICAL CONVERSION
	Comment: INSPECT POWDER COAT/CHEMICAL CONVERSION	08.02.05
12.0	D35841	WEB
	Comment: Qty.: 1.0000 Each(s)/Unit Total : 2.0000 Each(s) WEB BATCH: B32911	08.02.05
13.0	LANDING GEAR 1	LANDING GEAR RESOURCE 1

Comment: LANDING GEAR RESOURCE 1

1-Open X-Bolt holes to .750"(4Places) as per Dwg D3582, section B-B

2-Counter Sink X-BOLT holes as per Dwg D3582

3-Deburr and blow out chips from inside of tube.

4-Bond web as per Dwg D3582 & QSI 015
A/R 241 Sike Flex Batch: M103561 / M104732
Exp Date: 7-10-1 / 8-1-1

5-Weld x-bolt spacers as per Dwg D3582 .
A/R AL ROD Batch: M104305
M106330
08.02.08

6-Grind welds flush
08.02.08

Form: rprocess

Date: Monday, 2/11/2008 11:36:54 AM
User: Eric Charbonneau

Process Sheet

Customer: CU-DAR001 Dart Helicopters Services **Drawing Name:** BK117 SKIDTUBE ASSEMBLY

Job Number: 32910 **Part Number:** D117762041

Job Number:

Seq. #:	Machine Or Operation:	Description :

Tools: E

14.0	D2971	Cross Bolt Spacer	
Comment:	Qty.: 1.0000 Each(s)/Unit Total : 2.0000 Each(s) Cross Bolt Spacer batch: B33221		
15.0	D36621	SPACER	
Comment:	Qty.: 3.0000 Each(s)/Unit Total : 6.0000 Each(s) SPACER batch: B37189		
16.0	D36623	SPACER	
Comment:	Qty.: 1.0000 Each(s)/Unit Total : 2.0000 Each(s) SPACER batch: ~~B2~~ B37190		
17.0	D2973	Cross Bolt Spacer	
Comment:	Qty.: 2.0000 Each(s)/Unit Total : 4.0000 Each(s) Cross Bolt Spacer Batch: B14636		
18.0	QC9	VISUAL WELDING INSPECTION	
Comment:	VISUAL WELDING INSPECTION	PD 08.02.08	
19.0	QC5	INSPECT WORK TO CURRENT STEP	
Comment:	INSPECT WORK TO CURRENT STEP	PD ~~08.02.12~~ 08.02.08	
20.0	POWDER COATING	POWDER COATING	
	M106379		(1X)
Comment:	POWDER COATING Powder Coat White Gloss (Ref: 4.3.5.1) as per QSI 005 4.3	M-L 08/02/12	

Form: rprocess

Date: Monday, 2/11/2008 11:36:54 AM
User: Eric Charbonneau

Process Sheet

Customer: CU-DAR001 Dart Helicopters Services **Drawing Name:** BK117 SKIDTUBE ASSEMBLY

Job Number: 32910 **Part Number:** D117762041

Job Number:

Seq. #:	Machine Or Operation:	Description :
21.0	QC3	INSPECT POWDER COAT/CHEMICAL CONVERSION
	Comment: INSPECT POWDER COAT/CHEMICAL CONVERSION RH 08.12.12	
22.0	ALS71032130	Insert
	~~**Comment:** Qty.: 38.0000 Each(s)/Unit Total : 76.0000 Each(s) Insert Batch: M6989~~ NOT REQ'D RH DUPLICATE OF STEP 24	
23.0	ALS4428165	Inserts
	Comment: Qty.: 2.0000 Each(s)/Unit Total : 4.0000 Each(s) Inserts (or ALS7-428-165) batch: M6989	
24.0	ALS41032130	Insert
	Comment: Qty.: 38.0000 Each(s)/Unit Total : 76.0000 Each(s) Insert BATCH : M103495	
25.0	HAND FINISHING1	HAND FINISHING RESOURCE #1
	Comment: HAND FINISHING RESOURCE #1 Install Wearplate &Ground Wire inserts as per Dwg D3582.	
26.0	QC5	INSPECT WORK TO CURRENT STEP
	Comment: INSPECT WORK TO CURRENT STEP Inspect Inserts RH ~~08.12.12~~ 08.12.03	
27.0	D2965	Cap
	Comment: Qty.: 1.0000 Each(s)/Unit Total : 2.0000 Each(s) Cap Batch: B36033	

Form: rprocess

Date: Monday, 2/11/2008 11:36:54 AM
User: Eric Charbonneau

Process Sheet

Customer: CU-DAR001 Dart Helicopters Services **Drawing Name:** BK117 SKIDTUBE ASSEMBLY

Job Number: 32910 **Part Number:** D117762041

Job Number:

Seq. #:	Machine Or Operation:	Description :
28.0	D35083	WEARPLATE
	Comment: Qty.: 1.0000 Each(s)/Unit Total : 2.0000 Each(s) WEARPLATE Batch: B33020	
29.0	D35089	WEARPLATE
	Comment: Qty.: 1.0000 Each(s)/Unit Total : 2.0000 Each(s) WEARPLATE Batch: B33013	
30.0	D350811	WEARPLATE
	Comment: Qty.: 1.0000 Each(s)/Unit Total : 2.0000 Each(s) Batch: B33011 WEARPLATE	
31.0	D350813	WEARPLATE
	Comment: Qty.: 1.0000 Each(s)/Unit Total : 2.0000 Each(s) WEARPLATE Batch: ~~B33012~~ B36416	
32.0	D35583	GASKET
	Comment: Qty.: 1.0000 Each(s)/Unit Total : 2.0000 Each(s) GASKET Batch: B B33021	
33.0	D35589	GASKET
	Comment: Qty.: 1.0000 Each(s)/Unit Total : 2.0000 Each(s) GASKET Batch: B33016	
34.0	D355811	GASKET
	Comment: Qty.: 1.0000 Each(s)/Unit Total : 2.0000 Each(s) GASKET Batch: B33014	

Form: rprocess

Date: Monday, 2/11/2008 11:36:54 AM
User: Eric Charbonneau

Process Sheet

Customer: CU-DAR001 Dart Helicopters Services **Drawing Name:** BK117 SKIDTUBE ASSEMBLY

Job Number: 32910 **Part Number:** D117762041

Job Number:

Seq. #:	Machine Or Operation:	Description :
35.0	D355813	GASKET
	Comment: Qty.: 1.0000 Each(s)/Unit Total : 2.0000 Each(s) GASKET Batch: B33015	
36.0	D3492049	PLUG ASSEMBLY
	Comment: Qty.: 2.0000 Each(s)/Unit Total : 4.0000 Each(s) PLUG ASSEMBLY batch: B37288	
37.0	D3492051	PLUG ASSEMBLY
	Comment: Qty.: 2.0000 Each(s)/Unit Total : 4.0000 Each(s) PLUG ASSEMBLY batch: B37289	
38.0	D3492053	PLUG ASSEMBLY
	Comment: Qty.: 6.0000 Each(s)/Unit Total : 12.0000 Each(s) PLUG ASSEMBLY batch: ~~B37290~~ B37474	
39.0	AN3C4A	BOLT
	Comment: Qty.: ~~30~~ 20.0000 Each(s)/Unit Total : 60.0000 Each(s) BOLT Batch: M103641	
40.0	~~AN3C5A~~ AN3-5A	Bolt
	Comment: Qty.: 2.0000 Each(s)/Unit Total : 4.0000 Each(s) Bolt Batch: ~~M104118~~ M100188	
41.0	~~AN960C10L~~ AN960C10L	washer
	Comment: Qty.: ~~32~~ 28.0000 Each(s)/Unit Total : 64.0000 Each(s) washer Batch: M102473	

 41.5 AN960JD10L

Batch: M104885 qty: 2

Form: rprocess

Date: Monday, 2/11/2008 11:36:54 AM
User: Eric Charbonneau

Process Sheet

Customer: CU-DAR001 Dart Helicopters Services **Drawing Name:** BK117 SKIDTUBE ASSEMBLY

Job Number: 32910 **Part Number:** D117762041

Job Number:

Seq. #:	Machine Or Operation:	Description :
42.0	AN44A	Bolt

Comment: Qty.: 2.0000 Each(s)/Unit Total : 4.0000 Each(s)
Bolt
batch: M106918

43.0	AN960JD416L	Washer

Comment: Qty.: 2.0000 Each(s)/Unit Total : 4.0000 Each(s)
Washer
batch: M106785

44.0	HAND FINISHING1	HAND FINISHING RESOURCE #1

Comment: HAND FINISHING RESOURCE #1

1-Inspect for Foreign objects

2-Install Aft cap as per Dwg D3582, Detail "C"
A/R 241 Sika Flex Batch: M105585
Exp Date: 07-08

3-Install Wearplates as per Dwg D3582 ,
Note:Install Bolt and washer on Ground Wire inserts on top of tube see section D-D of dwg D3582
*******Do not install bolts where indicated on Dwg(Note #6)******
A/R 241 Sika Flex Batch: M105585
Exp Date: 07.08

4- Wing Walk as per Dwg D3043 and QSI 005 4.4

08/02/08

45.0	QC5	INSPECT WORK TO CURRENT STEP

Comment: INSPECT WORK TO CURRENT STEP PH 08.02.09

46.0	PACKAGING 1	PACKAGING RESOURCE #1

08-02-12 PH

Comment: PACKAGING RESOURCE #1
Identify and pack for shipping as per PPP D117-762-041
Location:
PPP Rev:

Form: rprocess

Date: Monday, 2/11/2008 11:36:54 AM
User: Eric Charbonneau

Process Sheet

Customer: CU-DAR001 Dart Helicopters Services **Drawing Name:** BK117 SKIDTUBE ASSEMBLY

Job Number: 32910 **Part Number:** D117762041

Job Number:

Seq. #:	Machine Or Operation:	Description :
47.0	QC21	FINAL INSPECTION/W/O RELEASE

Comment: FINAL INSPECTION/W/O RELEASE 2008/04/07

Job Completion

N/A FOR CONFORMITY
RA
08.02.12

Form: rprocess

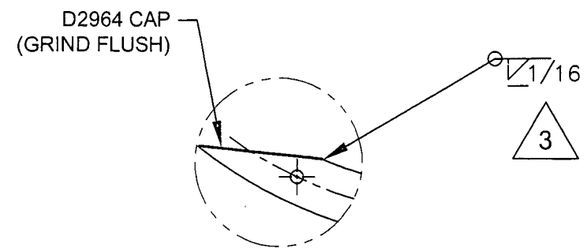

DETAIL C
SCALE 1:10

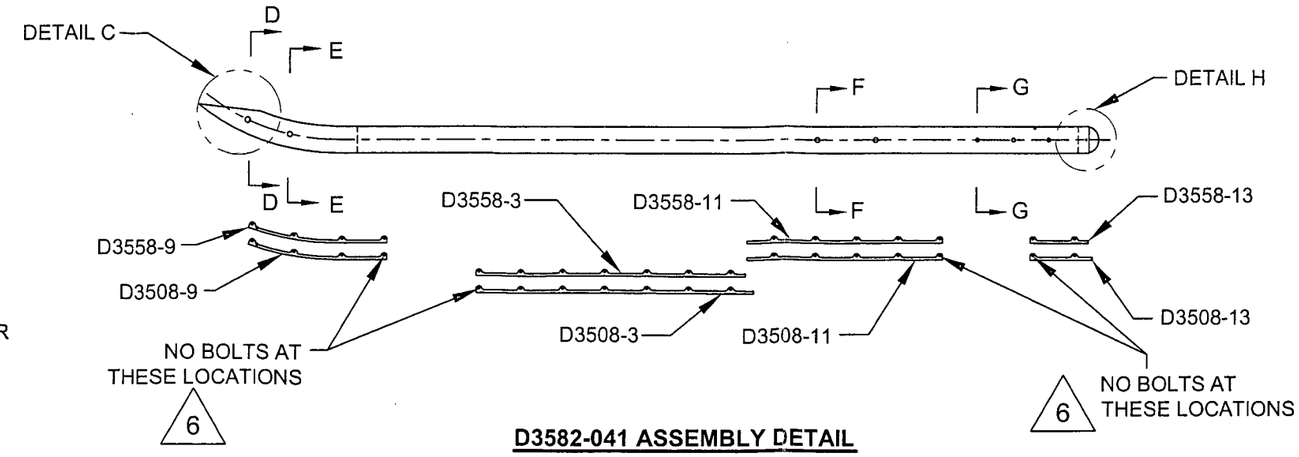

D3582-041 ASSEMBLY DETAIL

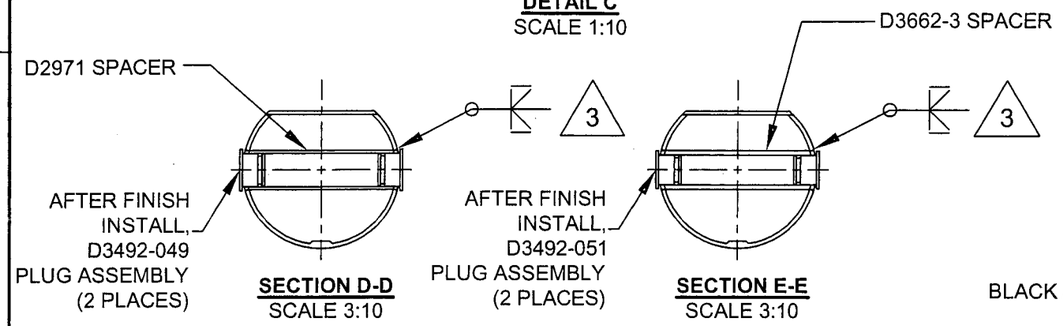

SECTION D-D
SCALE 3:10

SECTION E-E
SCALE 3:10

SECTION D-D NOTES
AFTER BENDING AND DRILLING ASSEMBLY
PERFORM THE FOLLOWING:
1. CHAMFER HOLE 0.030 x 45°
2. INSERT D2971 SPACER
3. WELD INTO PLACE AND GRIND FLUSH
4. PASS Ø0.750 DRILL TO REMOVE SPILL OVER
5. AFTER FINISH, INSTALL D3492-049 PLUG ASSEMBLY (2 PLACES)

SECTION E-E NOTES
AFTER BENDING AND DRILLING ASSEMBLY
PERFORM THE FOLLOWING:
1. CHAMFER HOLE 0.030 x 45°
2. INSERT D3662-3 SPACER
3. WELD INTO PLACE AND GRIND FLUSH
4. PASS Ø0.672 DRILL TO REMOVE SPILL OVER
5. AFTER FINISH, INSTALL D3492-051 PLUG ASSEMBLY (2 PLACES)

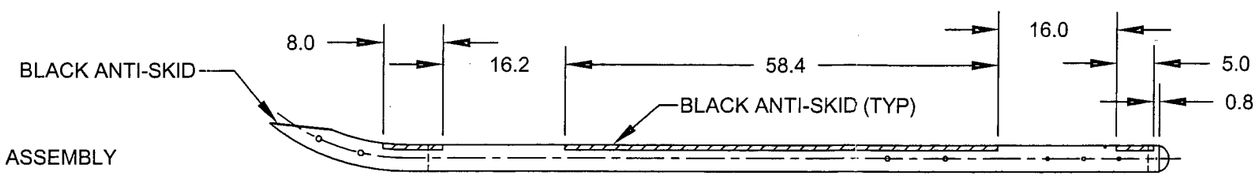

D3582-041 BLACK ANTI-SKID DETAIL

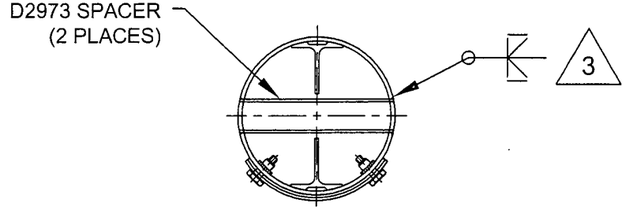

SECTION F-F
SCALE 3:10

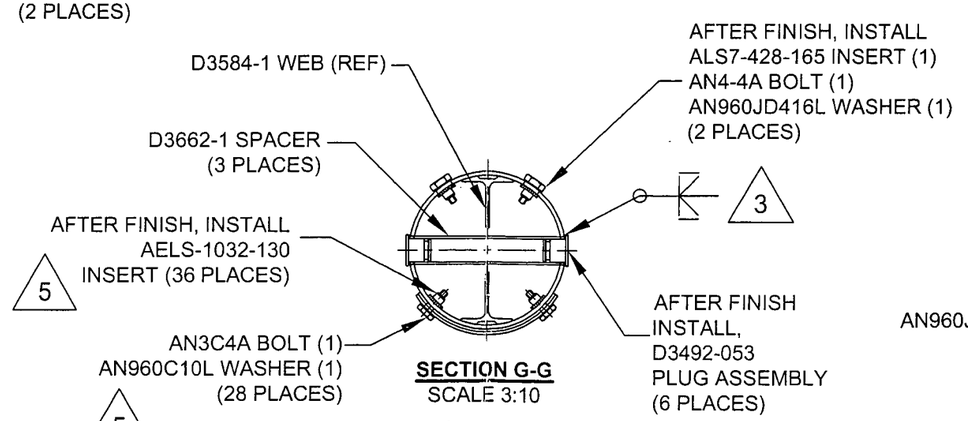

SECTION G-G
SCALE 3:10

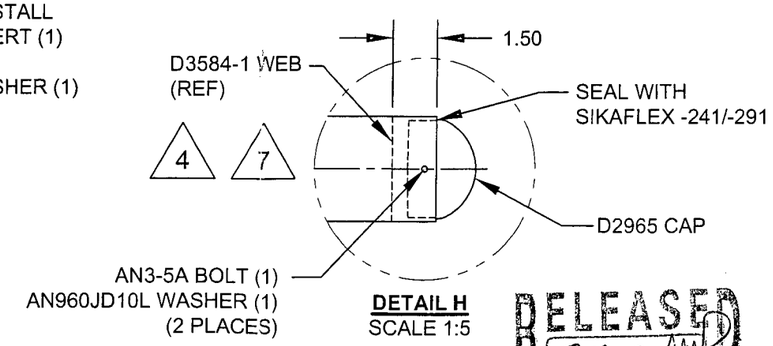

DETAIL H
SCALE 1:5

RELEASED
07.11.22

SECTION F-F NOTES
AFTER BENDING AND DRILLING ASSEMBLY
PERFORM THE FOLLOWING:
1. CHAMFER HOLE 0.030 x 45°
2. INSERT D2973 SPACER (2 PLACES)
3. WELD INTO PLACE AND GRIND FLUSH
4. PASS Ø0.625 DRILL TO REMOVE SPILL OVER

SECTION G-G NOTES
AFTER BENDING AND DRILLING ASSEMBLY
PERFORM THE FOLLOWING:
1. CHAMFER HOLE 0.030 x 45°
2. INSERT D3662-1 SPACER (3 PLACES)
3. WELD INTO PLACE AND GRIND FLUSH
4. PASS Ø0.515 DRILL TO REMOVE SPILL OVER
5. AFTER FINISH, INSTALL D3492-053 PLUG ASSEMBLY (6 PLACES)

DESIGN	PH	**DART AEROSPACE USA, INC** PORT HADLOCK, WA
DRAWN	PH	
CHECKED		DRAWING NO. D3582 — REV. A — SHEET 2 OF 2
MFG. APPR.		
APPROVED		TITLE: BK 117 SKIDTUBE ASSEMBLY — SCALE 1:20
DE APPR.		
DATE	07.06.08	

COPYRIGHT © 2007 BY DART AEROSPACE USA, INC
THIS DOCUMENT IS PRIVATE AND CONFIDENTIAL AND IS SUPPLIED ON THE EXPRESS CONDITION THAT IT IS NOT TO BE USED FOR ANY PURPOSE OR COPIED OR COMMUNICATED TO ANY OTHER PERSON WITHOUT WRITTEN PERMISSION FROM DART AEROSPACE USA, INC.

PARTS LIST FOR D3582-041 SKIDTUBE ASSEMBLY

Qty	Part Number	Description
X	D3582-041	SKIDTUBE ASSEMBLY
1	D2962-150	EXTRUSION
1	D2964	CAP
1	D2965	CAP
1	D2971	CROSS BOLT SPACER
2	D2973	CROSS BOLT SPACER
2	D3492-049	PLUG ASSEMBLY
2	D3492-051	PLUG ASSEMBLY
6	D3492-053	PLUG ASSEMBLY
1	D3508-3	WEARPLATE
1	D3508-9	WEARPLATE
1	D3508-11	WEARPLATE
1	D3508-13	WEARPLATE
1	D3558-3	GASKET
1	D3558-9	GASKET
1	D3558-11	GASKET
1	D3558-13	GASKET
1	D3584-1	WEB
3	D3662-1	CROSS BOLT SPACER
1	D3662-3	CROSS BOLT SPACER
36	AELS-1032-130	INSERT
2	ALS7-428-165	INSERT
28	AN3C4A	BOLT
2	AN3-5A	BOLT
2	AN4-4A	BOLT
28	AN960C10L	WASHER
2	AN960JD10L	WASHER
2	AN960JD416L	WASHER

GENERAL NOTES:

1) ALL DIMENSIONS ARE IN INCHES
2) TOLERANCES ARE PER DART QSI 018 UNLESS OTHERWISE NOTED
3) WELDING TO BE DONE PER DART QSI 004.
4) INSERT D3584-1 WEB TO LOCATION SHOWN OFF AFT END OF SKIDTUBE AND BOND WEB INTO OUTER TUBE WITH NON-STRUCTURAL SIKAFLEX-241/-291 ADHESIVE PER DART QSI 015 AFTER BENDING.
5) USE DART DRILL TEMPLATE DT8900 TO LOCATE AND DRILL Ø0.297 HOLES (36 PLACES) FOR WEARSHOE INSERTS. INSTALL AELS-1032-130 PER SECTION G-G (36 PLACES) AFTER FINISH. SEAL WEARPLATE BOLTS WITH SIKAFLEX-241/-291.
6) DO NOT INSTALL AN3C4A BOLTS AND AN960C10L WASHERS IN INDICATED LOCATIONS.
7) FINISH:
   A) CHEMICAL CONVERSION COAT PER DART QSI 005 4.1 PRIOR TO INSERTING D3584-1 WEB.
   B) POWDER COAT ASSEMBLY GLOSS WHITE (REF 4.3.5.1) PER DART QSI 005 4.3.
   C) ANTI-SKID PAINT AS INDICATED TO 1.00 ABOVE CENTER LINE PER DART QSI 005 4.4

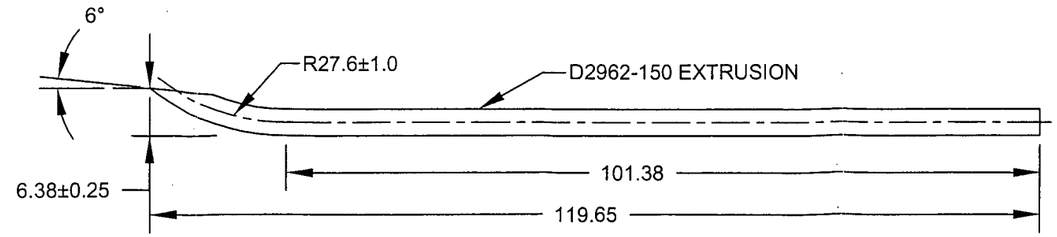

D3582-1 BENDING AND CUTTING DETAIL

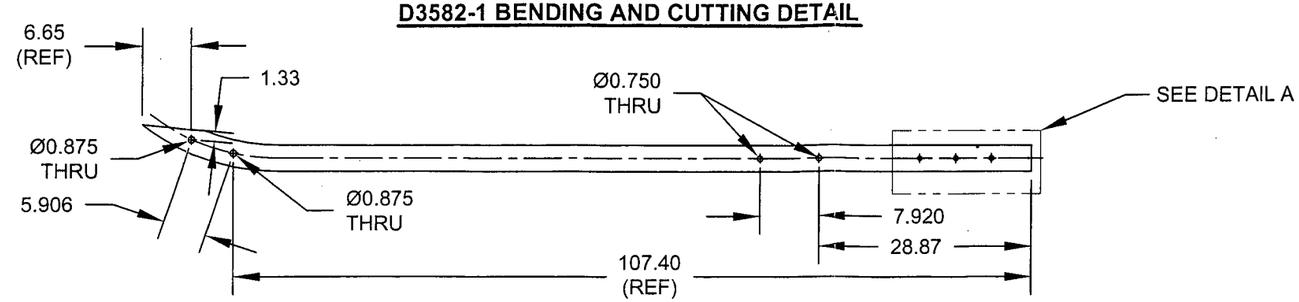

D3582-1 DRILLING DETAIL

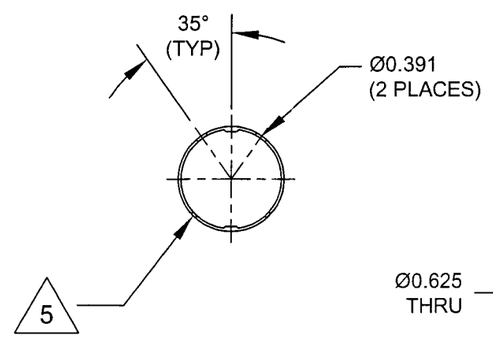

SECTION B-B
SCALE 1:5

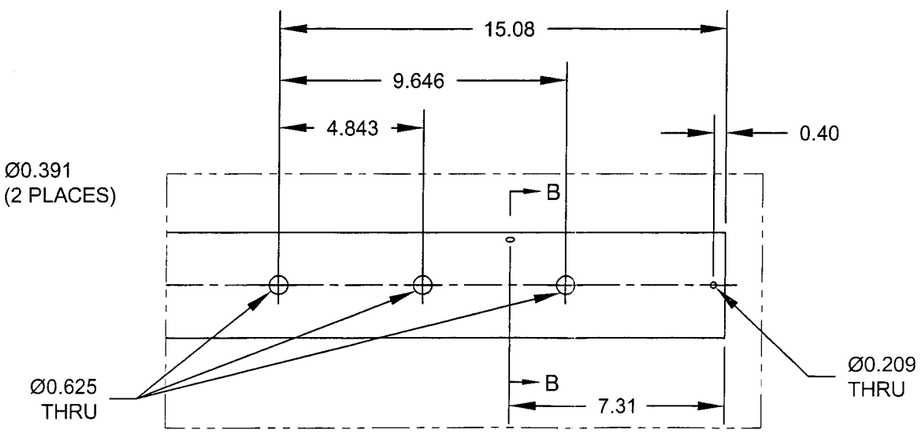

DETAIL A
SCALE 1:5

RELEASED 07.11.22

REV.	DESCRIPTION	BY	DATE
A	NEW ISSUE	PH	07.06.08

DESIGN	PH	DART AEROSPACE USA, INC PORT HADLOCK, WA	
DRAWN	PH		
CHECKED		DRAWING NO.	REV. A
MFG. APPR.		D3582	SHEET 1 OF 2
APPROVED		TITLE	SCALE
DE APPR.		BK 117 SKIDTUBE ASSEMBLY	1:20
DATE	07.06.08		

COPYRIGHT © 2007 BY DART AEROSPACE USA, INC
THIS DOCUMENT IS PRIVATE AND CONFIDENTIAL AND IS SUPPLIED ON THE EXPRESS CONDITION THAT IT IS NOT TO BE USED FOR ANY PURPOSE OR COPIED OR COMMUNICATED TO ANY OTHER PERSON WITHOUT WRITTEN PERMISSION FROM DART AEROSPACE USA, INC.

Dart Aerospace Ltd.

Date:
User:

AERO FACI

rocess Sheet

Dale,

Please file this in the D117-762-011 file

Thanks, Peter

エアロファシリティー株式会社
Tel 03・5574・7655

Customer	
Job Number	
Estimate Numb	
P.O. Number	
This Issue	
Prsht Rev.	
First Issue	
Previous Run	
Written By	
Checked & Ap	
Comment	
Additional Pro	

Drawing Name	: BK 117 SKIDTUBE
Part Number	: ENGINEERING
Drawing Number	: BK 117 SKIDTUBE
Project Number	: LG0005
Drawing Revision	: N/A
Material	:
Due Date	: 10/4/2006

Qty: 1 Um: Each

Job Number:

Seq. #:	Machine Or Operation:	Description :
1.0	ENGINEERING 1	ENGINEERING RESOURCE #1

Comment: ENGINEERING RESOURCE #1
Project Evaluation:
Involved:Marketing,Sales,Eng & Manegment
D117762041 B32910 and D117-762-011 / B33139 080118

RE-WORK

Comments:

D2971 B33221 2Pc
D3662-3 B37190 2Pc
D3662-1 B37189 6Pc
Aluminum Rod m106330

BE 08/02/06

- Inspect QC #9 PD 08-02-06
welding

- Inspect QC #5
work to current step 08/02/06

Form: rprocess

Date: Friday, 1/18/2008 8:10:37 AM
User: David Duval

Process Sheet

Customer: CC-DAR01 Dart Aerospace Ltd. **Drawing Name:** BK 117 SKIDTUBE

Job Number: 00083 **Part Number:** ENGINEERING

Job Number:

Seq. #: **Machine Or Operation:** **Description :**

- RE-FINISH
- INSTALL AELS-1032-130 INSERT (36) B _____ QTY(2)
  AL57-428-165 INSERT (2) B M6989 6989 (~~QTY 4~~)

QC3 PAINT

- INSTALL WEARPLATES AND GASKETS
  ~~D3508-3~~ ~~D3558-3~~ CAP ~~D2965 B36033~~
  D3507-13 B36416
  USING ~~AN3C4A BOLTS~~
  ~~AN960C10L WASHER~~

SEE ATTACHED

- INSTALL AN4-4A M106918
  AN960D416L M106785 (SECTION G-G) 12 PLACES)
- INSTALL D3492-049 PLUGS (2) _____ B37288
  D3492-051 " (2) _____ B37289
  D3492-053 " (6) _____ B37290

TURN OVER

2.0 ENGINEERING 1 ENGINEERING RESOURCE #1

Comment: ENGINEERING RESOURCE #1
Input Review:
Involved:Sales,Eng & Manufacturing Eng

Comments:
- QC #5 inspect final work
- QC #6 inspect work
- D3512-1 B 36180 QTY (2)

RA 08.02.12

3.0 MFG ENGINEERING MFG ENGINEERING

Comment: MFG ENGINEERING
Create Initial Estimate :
Involved:Manegment & Mfg Engineering

N/A 08.02.14 RA

Form: rprocess

- INSTALL D2965 CAP B36033

  ~~AN3-5A BOLT (2)~~

  ~~AN960D10L WASHER (2)~~

  AN3-5A BOLT M100117

  AN960D10L WASHER M104735

- WING WALK PER D3582

Date: Friday, 1/18/2008 8:10:37 AM
User: David Duval

Process Sheet

Customer: CC-DAR01 Dart Aerospace Ltd. **Drawing Name:** BK 117 SKIDTUBE

Job Number: 00083 **Part Number:** ENGINEERING

Job Number:

Seq. #:	Machine Or Operation:	Description :

Comments:
-
-
-
-
-
-
-
-
-
-
-

4.0 ENGINEERING 1 ENGINEERING RESOURCE #1

Comment: ENGINEERING RESOURCE #1
Preliminary Design Review
Involved:Marketing/Sales,Mfg Engineering,Engineering & Manegment

Comments:
-
-
-
-
-
-
-
-
-
-

N/A
08.02.14

5.0 00083A INITIAL PROTOTYPE TEMPLATE

Comment: Sub-Component INITIAL PROTOTYPE TEMPLATE

6.0 ENGINEERING 1 ENGINEERING RESOURCE #1

Comment: ENGINEERING RESOURCE #1
Final Design Review:
Involved:Marketing/Sales,Mfg Engineering & Manegement
Comments:
-
-

Date: Friday, 1/18/2008 8:10:38 AM
User: David Duval

Process Sheet

Customer: CC-DAR01 Dart Aerospace Ltd. **Drawing Name:** BK 117 SKIDTUBE

Job Number: 00083 **Part Number:** ENGINEERING

Job Number:

Seq. #:	Machine Or Operation:	Description :
	-	
	-	
	-	
10.0	MFG ENGINEERING	MFG ENGINEERING
	Comment: MFG ENGINEERING 1-Create NC programs if Applicable 2-Create Tooling if Applicable 3-Link 1st W/O (s) to Project W/O FOR 1ST Production Unit	N/A 06.02.14
11.0	OUTSIDE SERVICE	OUTSIDE SERVICES
	Comment: Sub-Contracting OUTSIDE SERVICES(Acuren Group p/o 2524 testing & analysis	
12.0	OUTSIDE SERVICE	OUTSIDE SERVICES
	Comment: Sub-Contracting TRADEWIND P/O 2232 PART # 1121-51002 SKID SHOE	
13.0	OUTSIDE SERVICE	OUTSIDE SERVICES
	Comment: Sub-Contracting TRADEWIND P/O 2232 PART # 1121-51102 clamping ring	
14.0	SMALL FAB 1	SMALL & MEDIUM FAB RESOURCE 1
	Comment: SMALL & MEDIUM FAB RESOURCE 1	
15.0	QC21	FINAL INSPECTION/W/O RELEASE
	Comment: FINAL INSPECTION/W/O RELEASE	08/02/14

Job Completion

Form: rprocess

Parts used on 00083 RH 08.02.12

Part Number	Batch	QTY
D2965	B36033 2	1
D3508-13	B36416 2	1
D3512-1	B36180 4	2
D3492-049	B37288	2
D3492-051	B37289	~~2~~ 4
D3492-053	B37290	~~8~~ 7
ALS4-428-165	B6989	2
AN3-5A	M100188	2
AN4-4A	M106918	2
AN960JD416L	M106785	2
AN960JD10L	M104885	2

[redacted]

D3508-3
D3556-3

D3492-053 were changed to D3492-053 B37474

SICIDTUBE WILL BE LABELED D117-762-011 B33139 RH
08.02.21